MENNEKES
MY POWER CONNECTION

Connector
PowerTOP Xtra R

Part number: 14658

MENNEKES
Elektrotechnik GmbH & Co. KG

Aloys-Mennekes-Straße 1
57399 Kirchhundem
GERMANY

Product Description

- screw connection technology ErgoCONTACT
- economic enclosure design with nubbed grip areas
- enclosure with thread lock and safety slide
- rubberised bayonet ring
- highly heat resistant contact carrier, nickel plated contacts
- X-CONTACT
- sealed against dust, temporary submersion and high pressure cleaning
- protection against kinking
- strain relief
- rubberised cable gland with sealing
- area for self-adhesive labels

Technical Details

Connector PowerTOP Xtra R	14658
Product serie	PowerTOP Xtra R
Ampere	32A
Number of poles	5p
Clock position	4h
Nominal voltage AC	110V
Nominal frequency	50 - 60 Hz
Protection type IP	IP69, IP67
Contact carrier	highly heat resistant contact carrier, nickel plated contacts
X-CONTACT	yes
Connection	screw terminals - ErgoCONTACT
Contact screw drive	PZ2, slot
Tightening torque connection terminal	1.8 Nm
Recommended wire end treatment for supply cable connection terminal	ferrule square gasproof crimped
Strip length jacket	68 mm
Strip length conductor PH + N	12 - 15 mm
Strip length conductor PE	12 - 15 mm
Pilot contact	without pilot contact
Conductor cross-section min.	2.5 mm^2

Connector PowerTOP Xtra R	14658
Conductor cross-section max.	6 mm^2
Cable kink protection	integrated in cable gland
Protective grommet	without protective grommet
Weight (net)	510 g
Packaging unit	10 pcs
Quantity per pallet	1120 pcs
EAN / identification number	4015394306061

Permissible ambient conditions

	Min.	Max.
Permanent ambient temperature	-25 °C	40 °C

Material properties

Cover	PA6 squirrel grey [similar RAL 7000]
Front part	PA6 yellow [similar RAL 1021]
	TPE black [similar RAL 9005]
Hinged lid	PA6 yellow [similar RAL 1021]
	TPE black [similar RAL 9005]
	PBT/PC squirrel grey [similar RAL 7000]
	TPE anthracite [similar RAL 7016]
Clamp basket	PA6 natural colour [no RAL colour code]
	TPE natural colour [no RAL colour code]
Fastening	PA6 squirrel grey [similar RAL 7000]
	TPE anthracite [similar RAL 7016]

Material resistance

The material resistance overview can be found on the website in the section “Knowledge” - “Product knowledge” - “Materials”.

Material and enviromental properties	
RoHS 2011/65/EU incl. 2015/863/EU	✓
POP regulation (EU) 2019/1021	✓

Regulations and Standards	
Norm	DIN EN IEC 60309-2
Declaration of Conformity	CE
Test label	CB Zertifikat, VDE

Dimensional Drawing

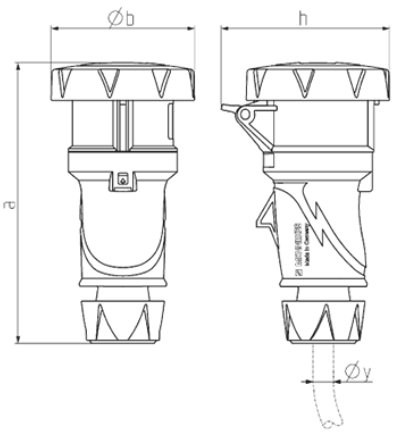

Drawing	Amp.	16			32		
3 MB 82	Poles	3	4	5	3	4	5
Dim. in mm	a	167	177	179	213	213	214
	b	73	82	89	97	97	103
	h	89	99	105	109	109	115
y min. from		7	8	8	10.5	10.5	13.5
to max. mm		—13	—15.5	—15.5	—18	—18	—20
Terminal for cond. cross		1	1	1	2.5	2.5	2.5
section (mm^2) min.-max.		—2.5	—2.5	—2.5	—6	—6	—6