MENNEKES
MY POWER CONNECTION

Wall mounted receptacle

Part number: 137

MENNEKES
Elektrotechnik GmbH & Co. KG

Aloys-Mennekes-Straße 1
57399 Kirchhundem
GERMANY

Product Description

- X-CONTACT
- internal fixing
- 20° inclination
- rubberised bayonet ring

Technical Details

Wall mounted receptacle	137
Ampere	125A
Number of poles	4p
Clock position	4h
Nominal voltage AC	110V
Nominal frequency	50 - 60 Hz
Protection type IP	IP67
Contact carrier	standard
X-CONTACT	yes
Connection	socket terminals
Contact screw drive	slot
Screw drive external screws	slot
Pilot contact	without pilot contact
Pilot contact switch	no
Cable entry at the top	1 x M50
Cable entry at the bottom	1 x M50
Blind cable entry at the rear	no
Enclosure base can be turned 180°	no
Insertion direction	angled
Inclination	20°
Type of mounting	internal fixing
Highly resistant to chemicals	no
Military version	no
Lockable	no
Tightening torque connection terminal	4 Nm
Conductor cross-section min.	25 mm^2

Wall mounted receptacle	137
Conductor cross-section max.	35 mm^2
Weight (net)	1974 g
Packaging unit	3 pcs
Quantity per pallet	75 pcs
EAN / identification number	4015394000655

Permissible ambient conditions

	Min.	Max.
Permissible ambient temperature	-25 °C	40 °C
Average temperature over 24 hours		35 °C

Material properties

Base	PC light grey [similar RAL 7035]
Upper part	PC/PET light grey [similar RAL 7035]
Hinged lid	PBT/PC yellow [similar RAL 1021]
	TPE black [similar RAL 9005]
	PBT/PC squirrel grey [similar RAL 7000]
	TPE anthracite [similar RAL 7016]
External screws	PA6 light grey [similar RAL 7035]

Material resistance

The material resistance overview can be found on the website in the section “Knowledge” - “Product knowledge” - “Materials”.

Material and environmental properties

RoHS 2011/65/EU incl. 2015/863/EU	✓
POP regulation (EU) 2019/1021	✓
Halogen-free	no

Regulations and Standards	
Norm	DIN EN IEC 60309-2
Declaration of Conformity	CE
Test label	EAC, CQC

Dimensional Drawing

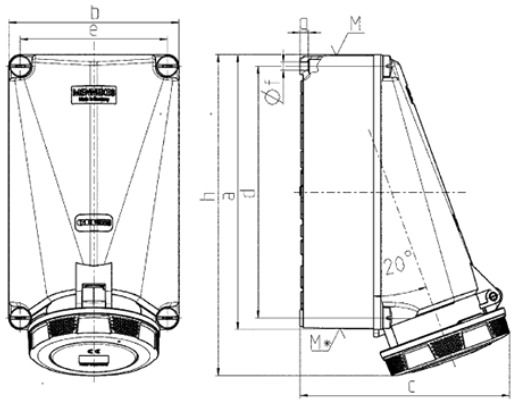

Drawing	Amp.	125	
1 MB 162	Poles	4	5
Dim. in mm	a	264	264
	b	163	163
	c	200	200
	d	240	240
	e	140	140
	f	8.1	8.1
	g	8	8
	h	306	306
	M	50	50
	M*	50	50
Max. cable diam. (mm)		38	38
Terminal for cond. cross		25	25
section (mm²) min.-max.		—35	—35